PF/SF Bins

ICE STORAGE BIN SERIES

PF/SF Bins
11/27/17
Item # 13163

Item #: _____

Project: _____

Qty: _____

AIA#: _____

PF - PVC Coated Galvanized Steel Finish
SF - Stainless Steel Finish

B-250PF

B-300PF
B-300SF
BD-300PF
BD-300SF

B-500PF
B-500SF
BD-500PF
BD-500SF

B-700PF
B-700SF

B-800PF
B-800SF

B-900PF
B-900SF

Features

- **Protected by H-GUARD Plus Antimicrobial Agent** H-GUARD PLUS
- **Polyethylene bin liner for sanitary storage**
- **Sturdy construction for side-by-side or stacked ice machine installation**

- Ice storage capacity from 250 lbs. up to 900 lbs.
- Both surfaces are designed for easy cleaning
- Long lasting attractive appearance
- Foamed-in-place polyurethane insulation, in all bin walls and bottom, provides dependable ice storage
- H-GUARD Plus Antimicrobial adds extra protection to the ice scoop (included)

BD Bins

- Fit 24” - 24 1/2” deep ice machine without top kit extension

CANADIAN ENERGY
PERFORMANCE VERIFIED
RENDEMENT ENERGETIQUE VERIFIE

Warranty:
2 Year Parts & Labor (Production prior to January 2012)
3 Year Parts & Labor (Production January 2012 and after)
Valid in United States, Canada, Puerto Rico and U.S. Territories. Contact factory for warranty in other countries.

Model Number	Exterior Dimensions W x D x H*	Application Storage Capacity †	Cubic Volume	Interior Dimensions W x D x H*	Shipping Weight
B-250PF	30” x 32 1/2” x 33 3/8”	250 lbs.	10.30 ft³	27 1/10” x 27 7/10” x 23 7/10”	130 lbs.
B(D)-300PF/SF	22” x 32 1/2” x 46”	300 lbs.	11.51 ft³	19 1/10” x 27 7/10” x 37 3/5”	135 lbs.
B(D)-500PF/SF	30” x 32 1/2” x 46”	500 lbs.	16.33 ft³	27 1/10” x 27 7/10” x 37 3/5”	155 lbs.
B-700PF/SF	44” x 32 1/2” x 46”	700 lbs.	24.77 ft³	41 1/10” x 27 7/10” x 37 3/5”	200 lbs.
B-800PF/SF	48” x 32 1/2” x 46”	800 lbs.	26.90 ft³	45 1/10” x 27 7/10” x 37 3/5”	210 lbs.
B-900PF/SF	52” x 32 1/2” x 46”	900 lbs.	29.59 ft³	49 1/10” x 27 7/10” x 37 3/5”	220 lbs.

*Height includes 6” legs
† Capacity based on volume x 30 lb/ft³ average density of ice.

Printed in the U.S.A.

Hoshizaki reserves the right to change specifications without notice.

PF/SF Bins

ICE STORAGE BIN SERIES

PF/SF Bins
11/27/17
Item # 13163

Ice Machine Model Application

Bins	22" Width KM-340M KM-515M KM-600M KM-650M F-450M F-801M F-1002M	22" Width KMD-410M† KMS-822M† FD-650M-C† FD-1002M-C†	30" Width KM-901M KM-1340M KM-1601M KML Series F-1501M F-2001	30" Width KMD-460M‡ KMD-530M‡ KMD-850M‡ KMD-901MRH KMD-901MWH KMS-1401M* KMS-2000M*	44" Width 2 KM-340M 2 KM-515M 2 KM-600M 2 KM-650M IM-500S 2 F-450M 2 F-801M 2 F-1002M	44" Width 2 KMD-410M 2 KMS-822M 2 FD-650M-C 2 FD-1002M-C	48" Width KM-1301S KM-1400S KM-1601S KM-1900S KM-2100S KM-2500S
Bins B-300PF/SF	NO TOP KIT NEEDED	N/A	N/A	N/A	N/A	N/A	N/A
Bins B-250PF B-500PF/SF	NEED HS-2033	NEED HS-2033 & HS-2129	NO TOP KIT NEEDED	NEED HS-2129	N/A	N/A	N/A
Bins B-700PF/SF	NEED HS-2035	NEED HS-2035 & HS-2130	NEED HS-2034	NEED HS-2034 & HS-2130	NO TOP KIT NEEDED	NEED HS-2130	N/A
Bins B-800PF/SF	NEED HS-2035 & HS-2032	NEED HS-2035 & HS-2132/ 2131	NEED HS-2034 & HS-2032	NEED HS-2131 & HS-2034/2032	NEED HS-2032	NEED HS-2130 & HS-2131	NO TOP KIT NEEDED
Bins B-900PF/SF	NEED HS-2035 & HS-2033	NEED HS-2035 & HS-2033/ HS-2132	NEED HS-2035	NEED HS-2132 & HS-2035	NEED HS-2033	NEED HS-2033 & HS-2132	NEED HS-2032

BD Bins fit 24" - 24 1/2" deep ice machine without Top Kit extension.
†**BD-300PF/SF:** KMD-410M, KMS-822M, FD-650M-C, FD-1002M-C
‡**BD-500PF/SF:** KMD-460M, KMD-530, KMD-850

* Any KMS or FD on bin need Top Kit Extension:
- HS-2129 - for use with B-500 bins
- HS-2130 - for use with B-700 bins
- HS-2131 - for use with B-800 bins
- HS-2132 - for use with B-900 bins

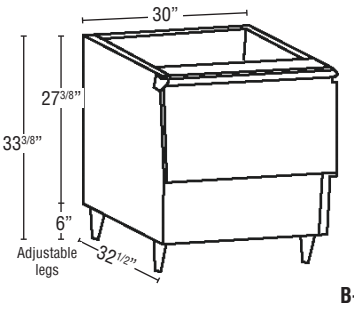

B-250PF

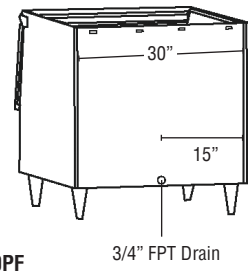

B-300PF/SF
BD-300PF/SF

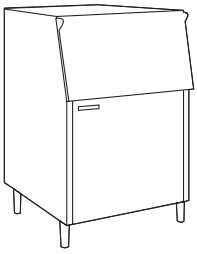

B-500PF/SF
BD-500PF/SF

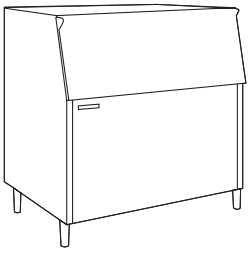

B-700PF/SF

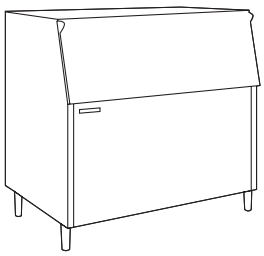

B-800PF/SF

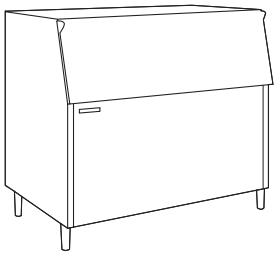

B-900PF/SF

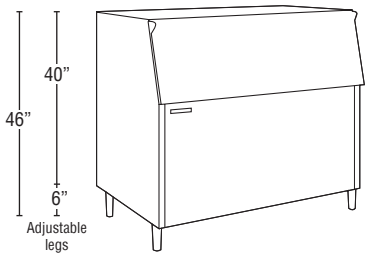

Bin Height

B-300PF/SF
BD-300PF/SF
B-500PF/SF
BD-500PF/SF
B-700PF/SF
B-800PF/SF
B-900PF/SF

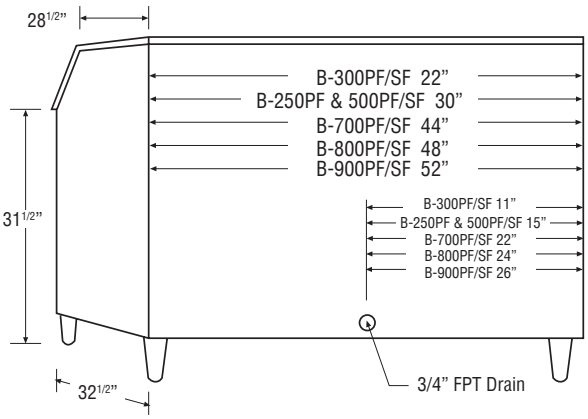

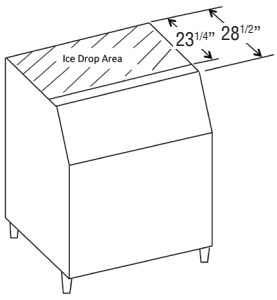

B Bins
Top View

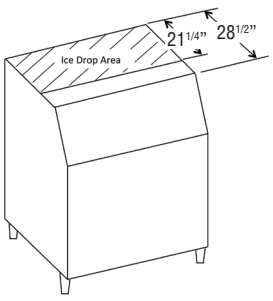

BD Bins
Top View