B-1150SS (1300/1500/1650)

ICE STORAGE BINS

B-1150SS
(1300/1500/1650)
08/14/17
Item # 13178

Item #: _____

Project: _____

Qty: _____

AIA#: _____

SS - Stainless steel front, sides, back and bottom

B-1150SS

B-1300SS

B-1500SS

B-1650SS

CANADIAN ENERGY
PERFORMANCE VERIFIED
RENDEMENT ENERGETIQUE VERIFIE

ISO9001 • ISO14001

Features

- **82 oz. scoop protected by H-GUARD Plus Antimicrobial Agent**
- **Seamless polyethylene bin liner for sanitary storage**
- **Sealed door gasket reduces risk of airborne bacteria**

- Ice storage capacity from 1148 lbs. to 1605 lbs.
- Easy cleaning and long lasting attractive appearance
- Foamed-in-place polyurethane insulation, in all bin walls and bottom, which provides maximum ice preservation
- New baffle design increases ice accessibility by 30%
- View windows provide instant inspection and thermal break
- Pouch style insulated door prevents condensation while providing maximum access and minimal spillage
- All bins include Universal Top Kit - note application guide to verify fit
- 6" adjustable stainless steel legs

Warranty:
5 Year Parts & Labor.
Valid in United States, Canada, Puerto Rico and U.S. Territories. Contact factory for warranty in other countries.

Model Number	Exterior Dimensions W x D x H*	Maximum Storage Capacity †	Cubic Volume	Shipping Weight
B-1150SS	48" x 41" x 60 3/16"	1148 lbs.	36.9 ft³	345 lbs.
B-1300SS	48" x 41" x 66 3/16"	1304 lbs.	41.2 ft³	365 lbs.
B-1500SS	60" x 41" x 62 3/16"	1500 lbs.	47.2 ft³	395 lbs.
B-1650SS	60" x 41" x 66 3/16"	1605 lbs.	48.0 ft³	415 lbs.

*Height includes 6" legs
† Capacity based on volume x 30 lb/ft³ average density of ice.

Printed in the U.S.A.

Hoshizaki reserves the right to change specifications without notice.

B-1150SS (1300/1500/1650)

ICE STORAGE BINS

B-1150SS
(1300/1500/1650)
08/14/17
Item # 13178

Ice Machine Model Application

Bins	22" Width KM-340M KM-515M KM-600M KM-650M F-450M F-801M F-1002M	30" Width KM-901M KM-1100M KM-1340M KM-1601M KML Series F-1501M F-2001	44" Width 2 KM-340M 2 KM-515M 2 KM-600M 2 KM-650M 2 F-450M 2 F-801M 2 F-1002M	48" Width KM-1301S KM-1400S KM-1601S KM-1900S KM-2100S KM-2500S	60" Width 2 KM-901M 2 KM-1100M 2 KM-1340M 2 KM-1601M 2 KML Series 2 KMD Series* 2 F-1501M 2 F-2001M
48" Width Bin B-1150SS B-1300SS	Universal Top Kit	Universal Top Kit *KMD/KMS Series, N/A*	N/A	Universal Top Kit	N/A
60" Width Bin B-1500SS B-1650SS	N/A	Universal Top Kit HS-2111 *KMD/KMS Series, N/A*	Universal Top Kit	Universal Top Kit	Universal Top Kit *2 KM-901M, Not Available*

The B-1150SS, B-1300SS, B-1500SS, B-1650SS are equipped with a universal top kit

Plumbing • 3/4" FPT Drain

	B-1150SS	B-1300SS	B-1500SS/B-1650SS
A	27 5/8" (702 mm)	27 5/8" (702 mm)	44 3/4" (702 mm)
B	17 7/8" (454 mm)	17 7/8" (454 mm)	34 7/8" (454 mm)
C	10 3/16" (259 mm)	10 3/16" (259 mm)	9 5/8" (259 mm)
D	5" (126 mm)	3 3/8" (126 mm)	3 3/8" (126 mm)

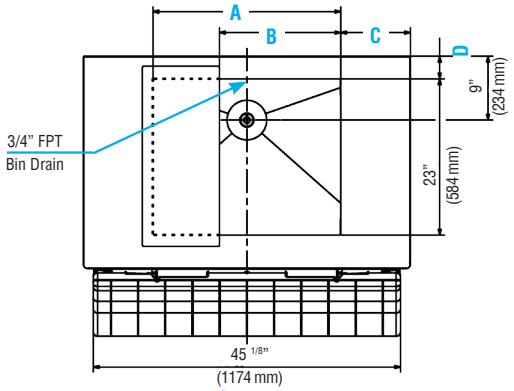

TOP VIEW
B-1150/1300/1500/1650SS

FRONT VIEW
B-1150/1300SS

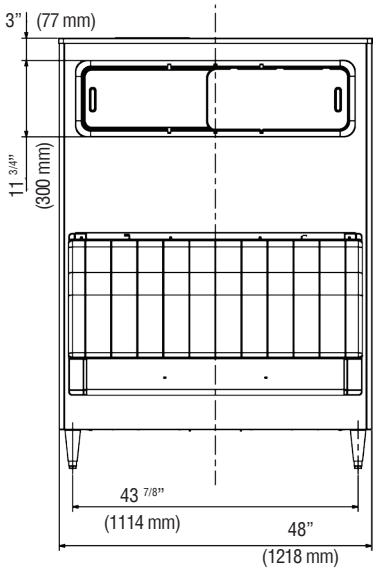

FRONT VIEW
B-1500/1650SS

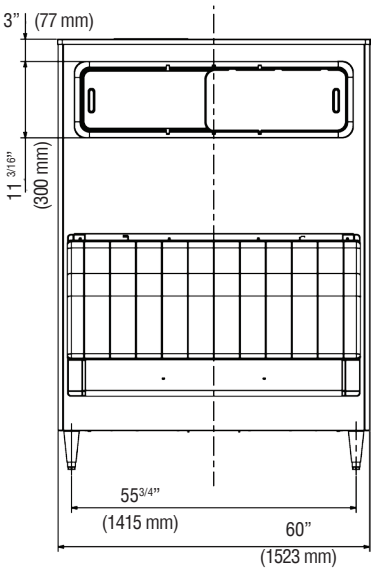

SIDE VIEW
B-1150/1300/1500/1650SS

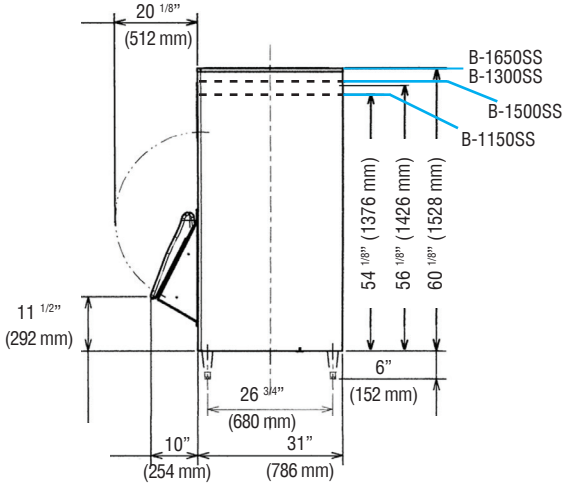
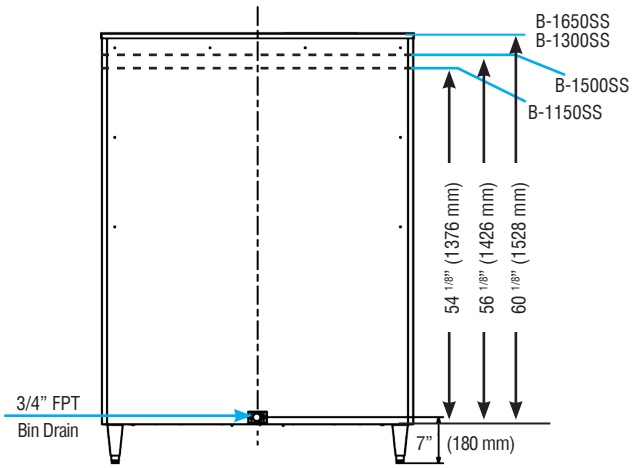
REAR VIEW
B-1150/1300/1500/1650SS